МУЗЦЕНТР
МУЗЫКАЛЬНОЕ ОБОРУДОВАНИЕ
http://muzcentre.ru/

CL7

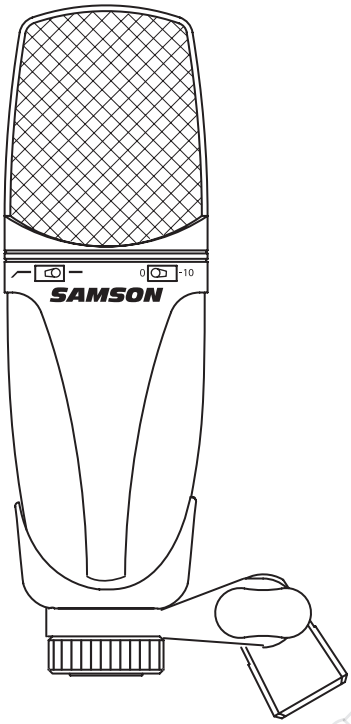

Large Diaphragm Studio Condenser Microphone

Owners Manual

SAMSON®
AUDIO

PROFESSIONAL MICROPHONES

Table Of Contents

Introduction **3**

CL7 Features **3**

Operating the CL7 **4**
- Powering the CL7 4
- Setting up the Signal Level 4
- Using the PAD switch 4
- Using the Hi-pass Filter switch 5
- Polar Pattern 5
- Microphone Placement 6
- P-Popping 6
- Stand Mounting 6

Using the Optional SP01 "Spider" Shock-Mount **7**

Specifications **8**

Copyright 2003, Samson Technologies Corp.

Printed December, 2003

Samson Technologies Corp.
575 Underhill Blvd.
P.O. Box 9031
Syosset, NY 11791-9031
Phone: 1-800-3-SAMSON (1-800-372-6766)
Fax: 516-364-3888
www.samsontech.com

A K-TEAM PRODUCTION

Introduction

Congratulations on your purchase of the Samson CL7 studio condenser. The CL7 features a large, 1.1-inch, ultra thin diaphragm capsule which faithfully reproduces a variety of sound sources including vocals, acoustic instruments and overhead cymbals, to name a few. The extended frequency and fast transient response insures an accurate reproduction with linear characteristics from bottom to top.

In these pages, you'll find a detailed description of the features of the CL7 Studio Condenser Microphone, as well as step-by-step instructions for its setup and use, and full specifications. You'll also find a warranty card enclosed—please don't forget to fill it out and mail it in so that you can receive online technical support and so we can send you updated information about these and other Samson products in the future.

With proper care, your CL7 will operate trouble free for many years. We recommend you record your serial number in the space provided below for future reference.

Serial number: _____

Date of purchase: _____

Should your unit ever require servicing, a Return Authorization number (RA) must be obtained before shipping your unit to Samson. Without this number, the unit will not be accepted. Please call Samson at 1-800-3SAMSON (1-800-372-6766) for a Return Authorization number prior to shipping your unit. Please retain the original packing materials and if possible, return the unit in the original carton and packing materials.

CL7 Features

- Large Diaphragm Studio Condenser
- 1.1" Capsule with 3-micron Gold Sputtered Diaphragm
- Switchable Hi-pass Filter, 12dB per octave at 100 Hz
- Switchable 10 dB PAD for handling signals with high SPL's (Sound Pressure Levels)
- Smooth and transparent sound reproduction
- Cardioid pick-up pattern
- 36-52 Volt Phantom Power operation
- Internal Shock-mount
- Extended frequency response
- Solid Die Cast construction
- Swivel Stand Mount and Carry Case included

Operating the CL7

Powering the CL7

The CL7 is a condenser microphone and therefore needs to be operated by connecting a phantom power supply. Phantom power is standard on most quality mixers, outboard mic-pres and hard disk recorders. If necessary, an external phantom supply can also be used. The CL7 receives the phantom power directly from a mic cable when connected to a mixer or other microphone input that includes a phantom supply. The power is sent OUT of the microphone INPUT, riding silently along with the audio signal. (Fairly mysterious, eh?) Most mixers have a switch to engage the phantom power so be sure to check that the phantom power is on.

Setting Up the Signal Level

When connecting the CL7 to a mixer or recorder input, be sure that the input is of microphone level. Also, be sure that the phantom power is engaged as explained the previous section “Powering the CL7”. Most mixers and recorders of reasonable quality will offer a microphone input with mic trim (usual called Trim or Gain) control. The purpose of the mic trim control is to optimize the amount of good signal to any noise associated with the mixers electronics. A good mic pre with trim also will have a PEAK or CLIP LED. To set a good level on the mic, set the CL7 up in front of the desired sound source and slowly raise the mic trim control until you see the PEAK LED light up. Then, turn the mix trim control down until the LED does not light any more. On most mixers, the ideal setting is that the trim control is turned up as much as possible without lighting the PEAK LED.

❶ Using the PAD Switch

The CL7 includes a PAD switch, which you can use to lower the input sensitivity of the microphone. When the PAD switch is set to the 0dB position the PAD is by-passed and there is no effect on the signal. When the PAD switch is set to the –10dB position, the microphone’s input sensitivity will be lowered by 10dB. You can use the PAD when you are miking loud sound sources with a high SPL (Sound Pressure Level).

❷ Using the Hi-Pass Filter

The CL7 offers a user selectable hi-pass, (or low-cut filter), which you can use to eliminate any unwanted low frequency reproduction. When the Hi-pass Filter is set to the “flat” (indicated by the straight line) position, there is no effect on the signal. When the Hi-pass switch is set to the “roll-off” position (indicated with the angled line), a 12dB per octave low-cut at 100Hz is applied to the signal.

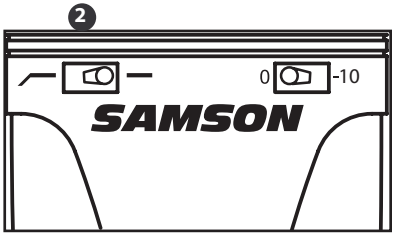

This can be extremely useful for removing low frequency stage rumble, wind noise during outdoor use, and filtering out lows from drums when used as overhead cymbal microphone on a drum kit.

Polar Pattern

The most important characteristic of any microphone is its directionality or “pick-up pattern”. There are three basic categories of pick up patterns; omni, bi and uni-directional. Omni mics pick up sound from all directions, bi-directional (figure 8) mics pick up the sound directly in front and back of the microphone while rejecting the sound on the left and right sides, and uni-directional (cardioid) mics pick up the sound in front of the microphone.

While omni and bi-directional microphones are very useful for a variety of applications, the majority of “miking” situations in recording and live sound require uni-directional or cardioid microphones. The uni-directional nature allows for better separation of instruments in the studio and more control over feedback in live sound reinforcement. When positioned correctly the hyper-cardioid pick-up pattern allows you to pick up more of the sound you want and less of the sound you don’t want.

Operating the CL7

Microphone Placement

In order to maximize the sound quality, you must pay careful attention to the placement of your CL7 and how it is positioned for the instrument or vocalist that you are miking. All microphones, especially uni-directional or cardioid microphones, exhibit a phenomenon known as “proximity effect.” Very simply put, proximity effect is a resulting change in the frequency response of a microphone based on the position of the mic capsule relative to the sound source. Generally, you will get a bass boost when miking in close. When you point a cardioid mic directly at the sound source (on axis) you will get the best frequency response, however when you start pointing the microphone slightly away (off axis) you will notice the low frequency response dropping off and the microphone will start to sound thinner.

For most vocal applications you’ll want to position the microphone directly in front of the artist. The same may be true for miking instruments, however, you can make some pretty amazing equalization adjustments by slightly changing the angle of the capsule to the sound source. This can be a very useful technique in capturing the optimum sound of drum set, acoustic guitar, piano or other instruments in a live room or sound stage. Experimentation and experience are the best teachers in getting good sounds, so plug in!

P-Popping

P-Popping is that annoying pop that you can get when the microphone diaphragm gets a blast of air from a vocalist pronouncing words with the letter “P” included. There are a few ways to deal with the problem including using an external pop filter. Some famous engineers have relied on an old nylon stocking stretched over a bent clothes hanger, which actually works very well. You can also try placing the microphone slightly off axis (on a slight angle) from the vocalist. This can often solve the problem without using an external pop filter.

Stand Mounting the CL7

The CL7 can be mounted to a standard microphone stand using the included swivel mount adapter. If you are using a U.S. 5/8” mic stand, you will need to remove, by unscrewing, the Euro stand adapter. Simply screw on the swivel adapter on your mic stand or boom arm. Now, loosen the thumbscrew and adjust the microphone to the desired angle. Once set, tighten the thumbscrew to secure the microphone in place.

Using the Optional SP01 Shock-Mount

Using the Optional SP01 "Spider" Shock-Mount

For additional isolation the CL7 can be fitted on the optional SP01 "Spider" shock mount. Follow the steps below to install the SP01.

- First, screw the SP01 shock mount onto your mic stand or boom arm. If you're using a US 5/8" mic stand or boom, remove the Euro adapter.
- Remove the CL7 swivel mount by rotating the threaded collar counter-clockwise as shown in figure 1.
- Install the CL7 into the SP01 by fitting the microphone into the center of the web, positioning the CL7 onto the bottom mounting plate.
- Secure the SP01 by reinstalling the threaded collar, rotating clockwise until tight. (Figure 2)
- Now, loosen the thumb screw to adjust the angle of the microphone and position the CL7 to the desired location. Once set, tighten the thumb-screw to secure the microphone in place.

  Note: Be careful not to cross thread or over tighten the threaded collar or thumb screw.

1

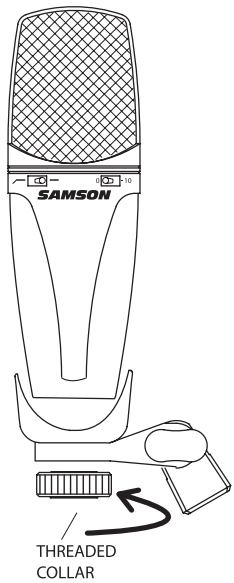

2

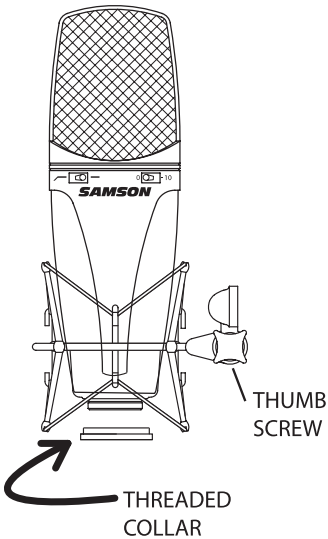

CL7 Specifications

CL7 Specifications

Frequency Response	20 ~ 20000 HZ
Polar pattern	Cardioid
Element type	Condenser
Diaphragm thickness	3 microns
Sensitivity	-40 dB/Pa
Max SPL	147 dB
Equivalent Noise Level	17dB
Impedance	200 ohms
Mininum Load Impedance	1000 ohms
Power supply voltage	phantom power 48V +/-3V
Weight	1.1 lbs. (500 g)
Dimensions	Height: 7" (175 mm) Width: 2.125" (54 mm) Depth: 2.125" (54 mm)

Specifications subject to change without notice.

CL7 POLAR PATTERN

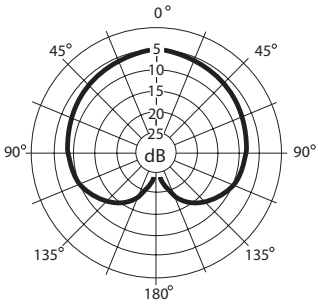

CL7 FREQUENCY RESPONSE

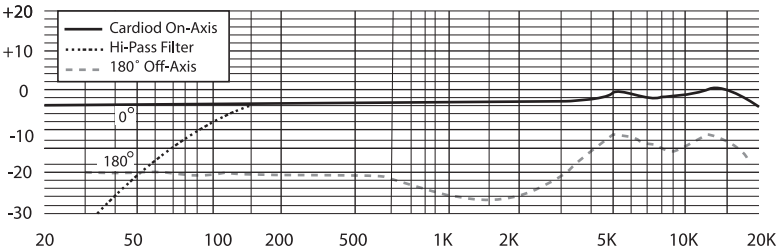

Samson Technologies Corp.

SAMSON®

575 Underhill Blvd.
P.O. Box 9031
Syosset, NY 11791-9031
Phone: 1-800-3-SAMSON (1-800-372-6766)
Fax: 516-364-3888
www.samsontech.com